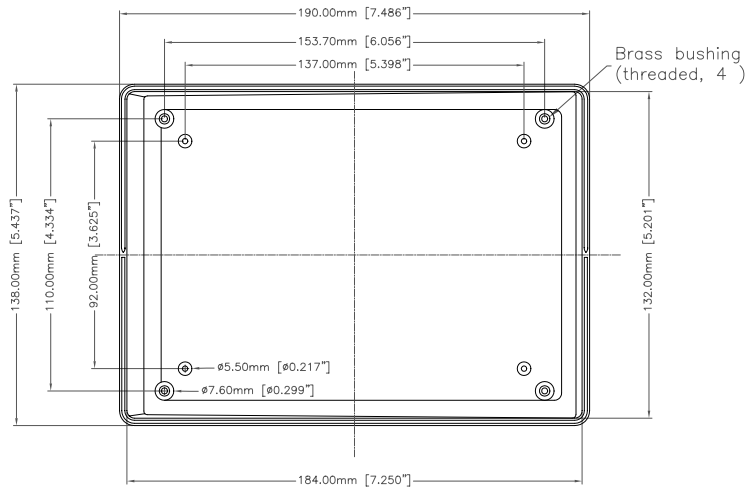

COVER–INSIDE

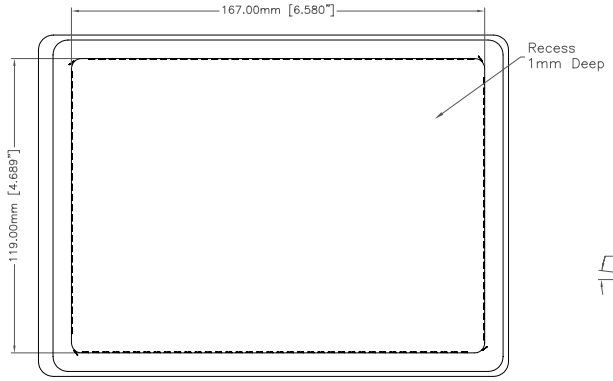

COVER–OUTSIDE

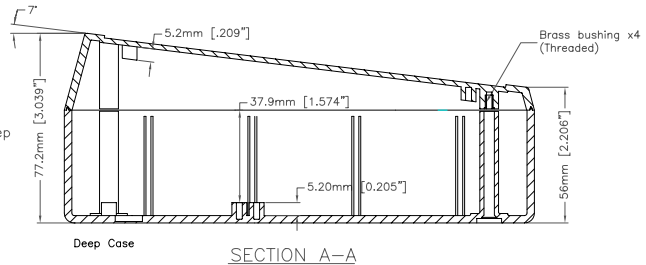

SECTION A–A
90–86–008
Deep Bottom Version

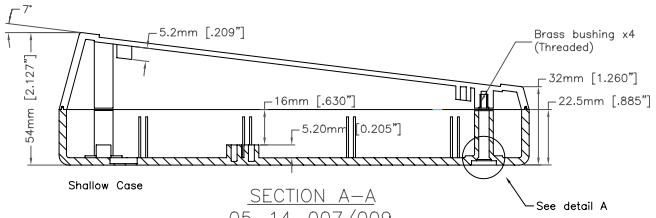

SECTION A–A
05–14–007/009
Shallow Bottom Version

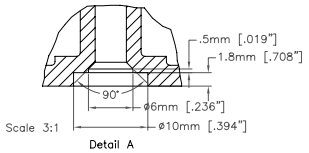

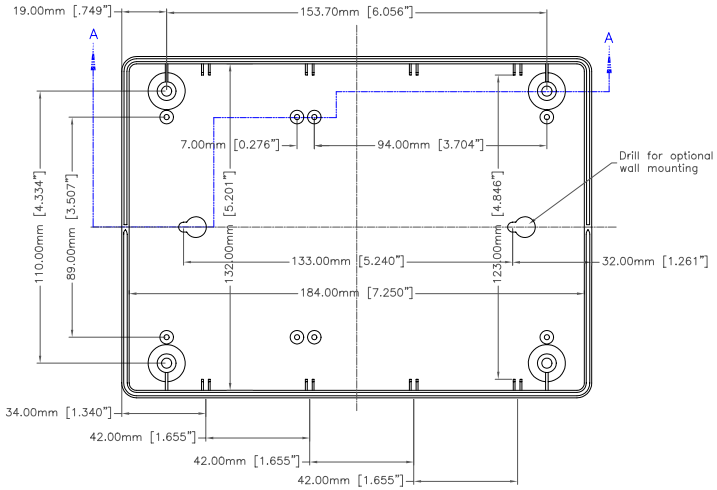

BASE–INSIDE

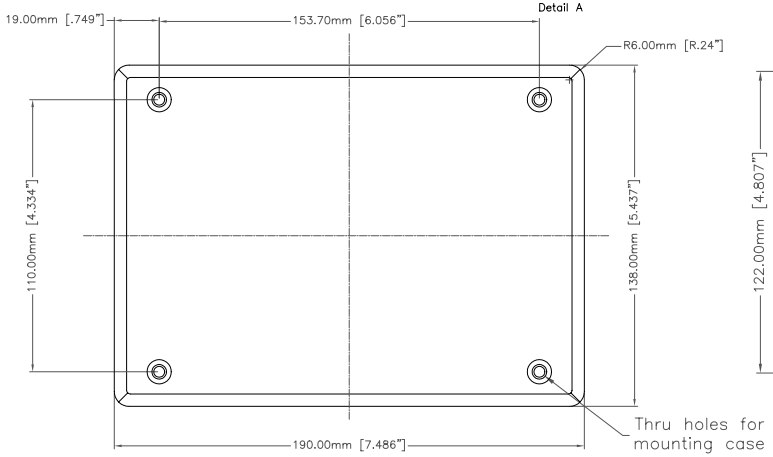

BASE–OUTSIDE

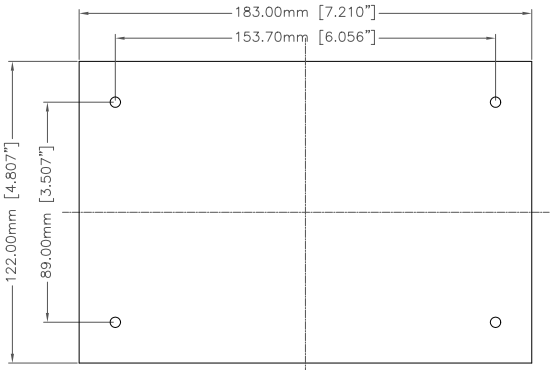

PC–BOARD – MTG. HOLES